NUCLEO-L552ZE-Q

STM32 Nucleo-144 development board with STM32L552ZE MCU, SMPS, supports Arduino, ST Zio and morpho connectivity

To compile a program for this board using Mbed CLI, use **NUCLEO_L552ZE_Q** as the target name.

Board Partner

(/teams/ST/)

ST (/teams/ST/)

A world leader in providing the semiconductor solutions that make a positive contribution to people's lives, both today and in the future.

Add to your Mbed Compiler (add/)

Buy Now (https://www.st.com/en/evaluation-tools/nucleo-l552ze-q.html)

Mbed OS support

- Mbed OS 5.15

Table of Contents

1. Overview
2. Microcontroller main features
3. Board features
4. Board pinout
5. mbed-os examples
6. Technical references
7. Known limitations

Overview

https://www.st.com/en/evaluation-tools/nucleo-l552ze-q.html (https://www.st.com/en/evaluation-tools/nucleo-l552ze-q.html)

The STM32 Nucleo-144 board provides an affordable and flexible way for users to try out new concepts and build prototypes by choosing from the various combinations of performance and power consumption features, provided by the STM32 microcontroller. For the compatible boards, the internal or external SMPS significantly reduces power consumption in Run mode.

The ST Zio connector, which extends the ARDUINO Uno V3 connectivity, and the ST morpho headers provide an easy means of expanding the functionality of the Nucleo open development platform with a wide choice of specialized shields. The STM32 Nucleo-144 board does not require any separate probe as it integrates the ST-LINK debugger/programmer. The STM32 Nucleo-144 board comes with the STM32 comprehensive free software libraries and examples available with the STM32Cube MCU Package.

Microcontroller main features

https://www.st.com/en/microcontrollers-microprocessors/stm32l552ze.html (https://www.st.com/en/microcontrollers-microprocessors/stm32l552ze.html)

The STM32L552xx devices are an ultra-low-power microcontrollers family (STM32L5 Series) based on the high-performance Arm® Cortex®-M33 32-bit RISC core. They operate at a frequency of up to 110 MHz.

Board features

- STM32 microcontroller in LQFP144 package
- 3 user LEDs
- 2 user and reset push-buttons
- 32.768 kHz crystal oscillator
- Board connectors:
  - ST Zio expansion connector including ARDUINO® Uno V3
  - ST morpho expansion connector
- Flexible power-supply options: ST-LINK, USB VBUS or external sources
- On-board ST-LINK debugger/programmer with USB re-enumeration capability: mass storage, Virtual COM port and debug port

Board pinout

Important Notice about this site
This site uses cookies to store information on your computer. By continuing to use our site, you consent to our cookies. If you are not happy with the use of these cookies, please review our Cookie Policy (https://www.arm.com/company/policies/cookies) to learn how they can be disabled. By disabling cookies, some features of the site will not work.
Accept and hide this message

Pins Legend

Labels usable in code

PX_Y	MCU pin without conflict
PX_Y	MCU pin connected to other components See **PeripheralPins.c** (link below) for more information
XXX	Arduino connector names (A0, D1, ...)
XXX	LEDs and Buttons (LED_1, USER_BUTTON, ...)

Labels not usable in code (for information only)

XXX	Serial pins (USART/UART)
XXX	SPI pins
XXX	I2C pins
XXX	PWMOut pins (TIMER n/c[N]) n = Timer number c = Channel N = Inverted channel
XXX	AnalogIn (ADC) and AnalogOut pins (DAC)
XXX	CAN pins
XXX	Power and control pins (3V3, GND, RESET, ...)

You can find more details on the available pins and labels in the **PeripheralPins.c** and **PinNames.h** files.

- ARMmbed/mbed-os repository on GitHub (**up-to-date** version, used with **mbed CLI commands**)

https://github.com/ARMmbed/mbed-os/tree/master/targets/TARGET_STM/TARGET_STM32L5/TARGET_STM32L552xx/TARGET_NUCLEO_L552ZE_Q (https://github.com/ARMmbed/mbed-os/tree/master/targets/TARGET_STM/TARGET_STM32L5/TARGET_STM32L552xx/TARGET_NUCLEO_L552ZE_Q)

Important Information for this Arm website

This site uses cookies to store information on your computer. By continuing to use our site, you consent to our cookies. If you are not happy with the use of these cookies, please review our Cookie Policy (https://www.arm.com/company/policies/cookies) to learn how they can be disabled. By disabling cookies, some features of the site will not work.

Accept and hide this message

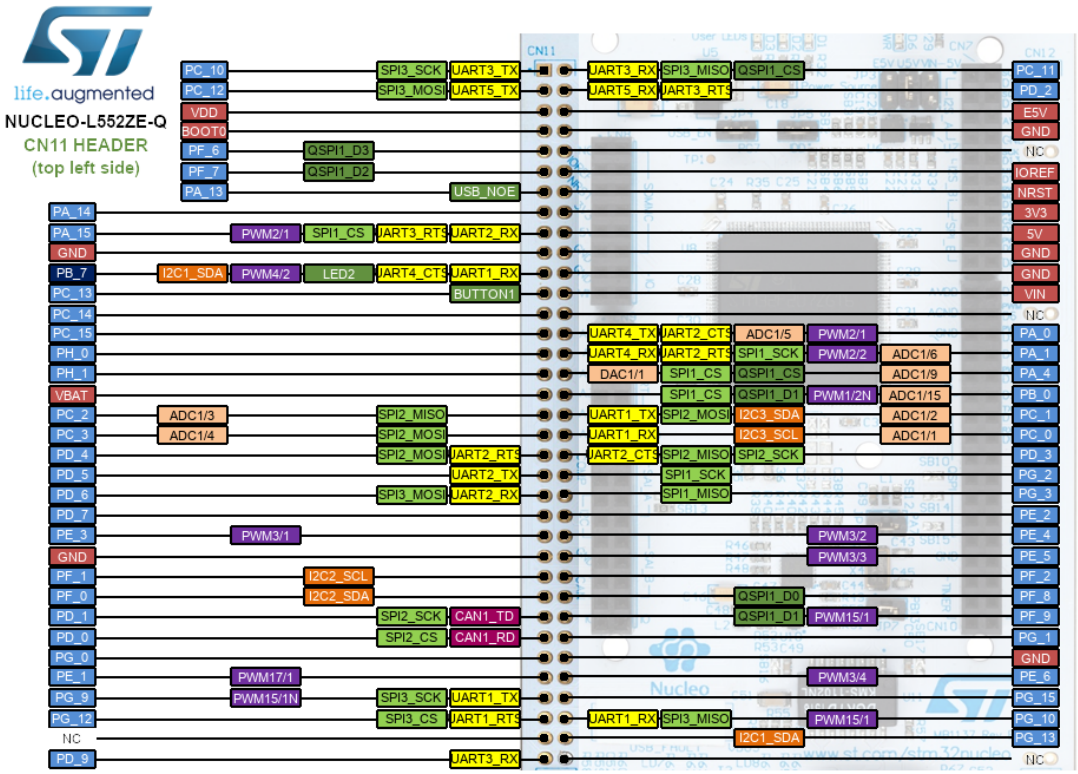

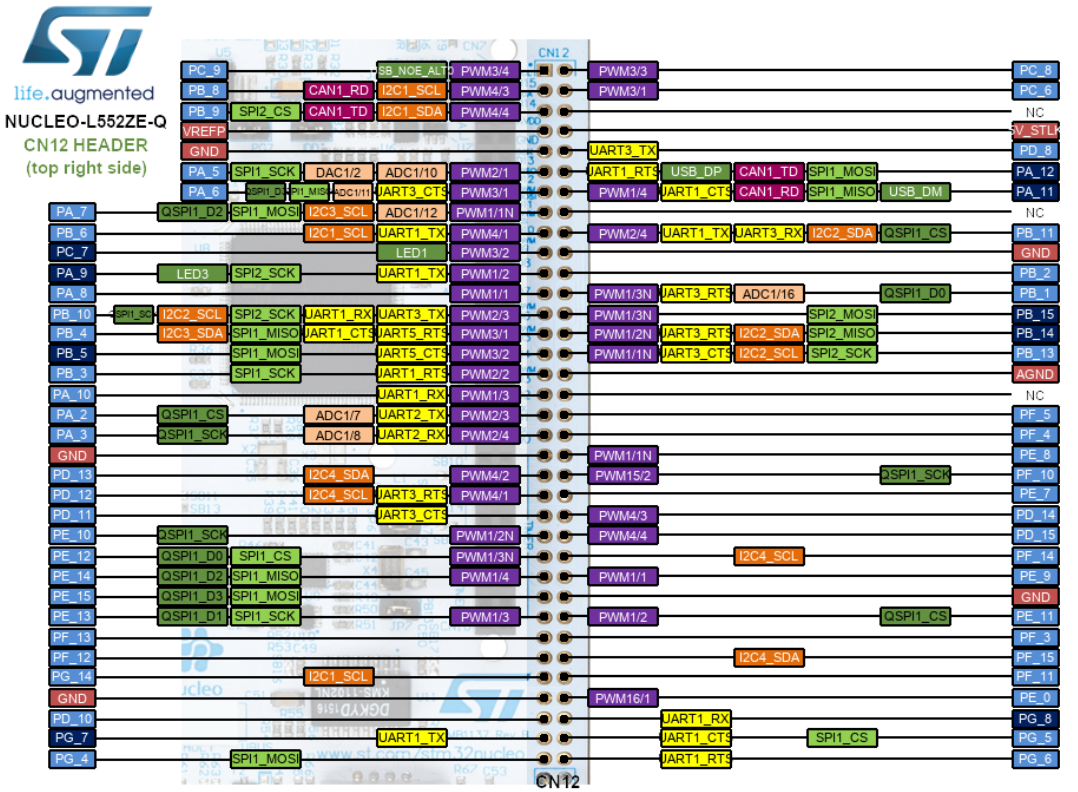

Important Information for this Arm website

This site uses cookies to store information on your computer. By continuing to use our site, you consent to our cookies. If you are not happy with the use of these cookies, please review our Cookie Policy (https://www.arm.com/company/policies/cookies) to learn how they can be disabled. By disabling cookies, some features of the site will not work.

Accept and Hide this message

CN8

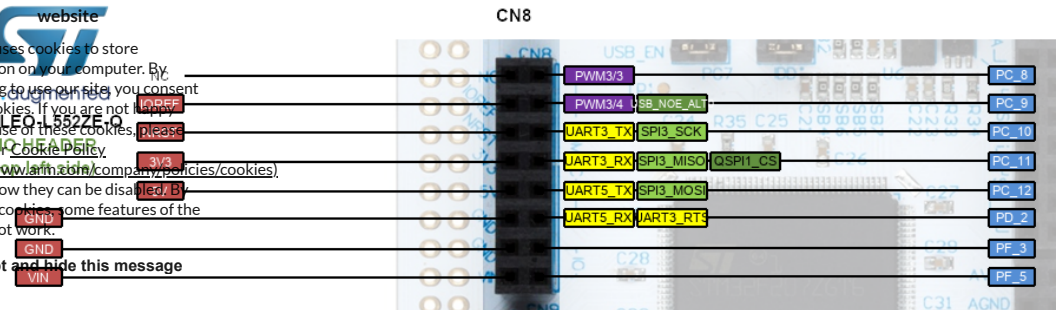

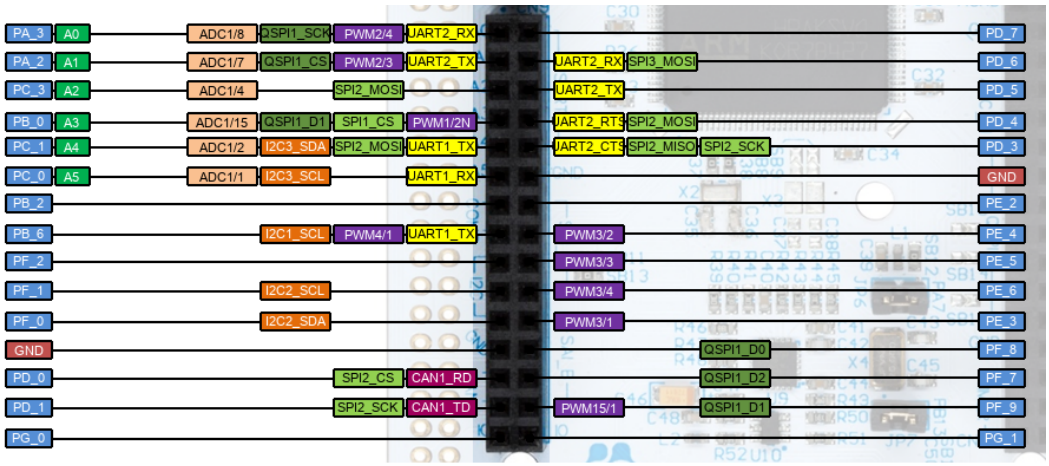

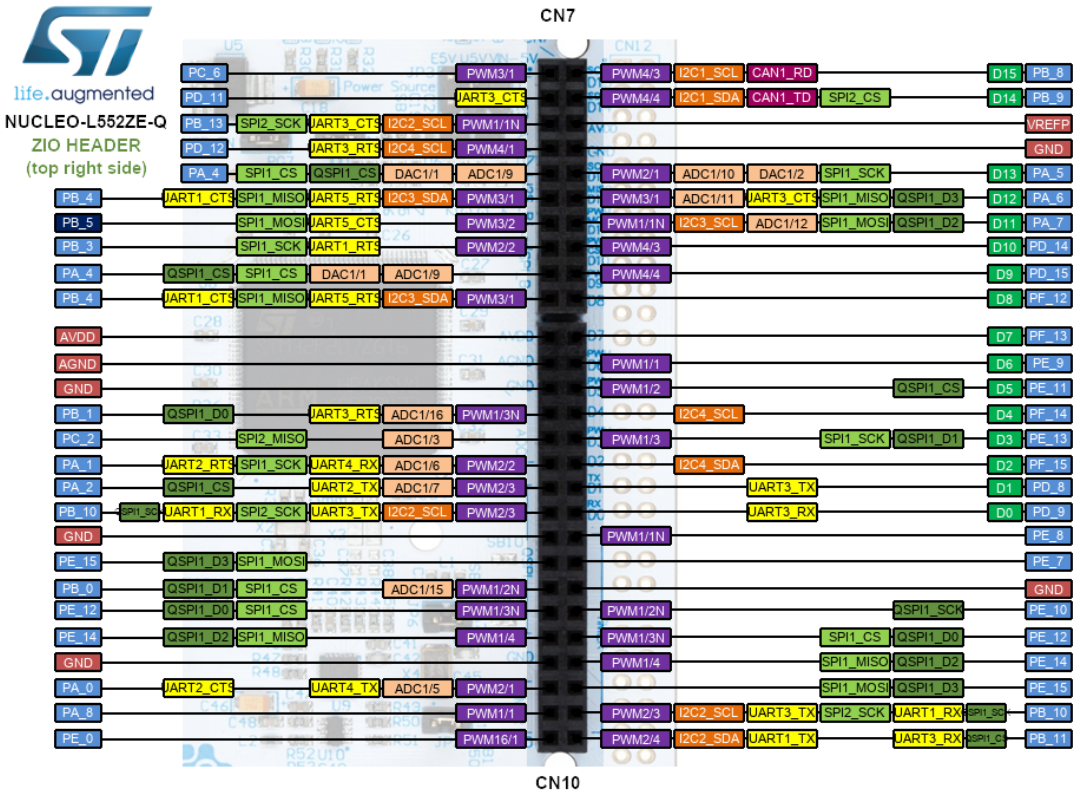

mbed-os examples

These official mbed-os examples have been tested on this board:

- https://github.com/ARMmbed/mbed-os-example-blinky (https://github.com/ARMmbed/mbed-os-example-blinky)

Technical references

- Datasheet (https://www.st.com/resource/en/datasheet/stm32l552ze.pdf)
- Reference Manual (https://www.st.com/content/ccc/resource/technical/document/reference_manual/group0/32/e9/c4/9a/ee/a4/43/f8/DM00346336/files/DM00346336.pdf/jcr:co
- Board User Manual (https://www.st.com/content/ccc/resource/technical/document/user_manual/group1/ad/a4/bd/5e/14/15/4e/e8/DM00615305/files/DM00615305.pdf/jcr:conten
- FW Update (https://www.st.com/en/development-tools/stsw-link007.html)

Important Information for this Arm website

This site uses cookies to store information on your computer. By continuing to use our site, you consent to our cookies. If you are not happy with the use of these cookies, please review our Cookie Policy (https://www.arm.com/company/policies/cookies) to learn how they can be disabled. By disabling cookies, some features of the site will not work.

Accept and hide this message

Known limitations

The following section describes known limitations of the platform. Note that general issues are tracked into the mbed repository (https://github.com/ARMmbed/mbed-os/issues) available on GitHub.

Buy Now (https://www.st.com/en/evaluation-tools/nucleo-l552ze-q.html)

You need to log in (/account/login/?next=/platforms/ST-Nucleo-L552ZE-Q/) to post a discussion

(https://twitter.com/ArmSoftwareDev) (https://www.youtube.com/c/ArmSoftwareDevelopers) (http://forums.mbed.com/) (http://blog.mbed.com/)

Copyright © 2022 Arm Limited (or its affiliates).

Important Information for this Arm website

This site uses cookies to store information on your computer. By continuing to use our site, you consent to our cookies. If you are not happy with the use of these cookies, please review our Cookie Policy (https://www.arm.com/company/policies/cookies) to learn how they can be disabled. By disabling cookies, some features of the site will not work.

Accept and hide this message